DS TO NS MIGRATION ON THE HP 3000

Chris Wallin

HEWLETT-PACKARD

GRENOBLE NETWORKS DIVISION

5, Avenue Raymond Chanas

38320 Eybens, FRANCE

WHAT IS NS?

NS is a family of networking products for the HP 3000 computers. It enables HP 3000 computers to send and receive data from other HP 3000 computers and even from non-HP equipments. NS is also a networking architecture which complies with the OSI (Open Systems Interconnect) seven layer model.

The first member of this family is the NS3000/V Network Services which covers the top most layers of the model. NS 3000/V provides the user with a set of networking capabilities ranging from terminal access (Virtual Terminal) and file transfer (Network File Transfer) to database access (Remote Database Access) and process to process communications (Network Interprocess Communication and Remote Process Management).

Other members of the NS family are all network links which correspond to the lower layers of the model, and which attach the system to the physical network: ThinLAN/V for local area networks, NS Point-to Point/V for synchronous high speed point-to-point connections, Asynchronous Serial Network Link (ASNL) for asynchronous connections over telephone lines, and NS X.25/V for X.25 wide area networks.

WHY MIGRATE TO NS ?

HP's networking offering has included in the past years the DS (Distributed Services) products, and there are many reasons for replacing them by the NS product family.

Broader user capabilities

Users can establish multiple sessions to the same remote system, and transfer groups of files, even between remote systems without the previous establishment of a remote session.

Network Transparency

NS routes data to the destination system, regardless of the number of intermediate systems and the number and type of networks it needs to cross. In consequence, the user does not need to know the network topology and simply enters the destination system name in his commands.

Large Scale Networking

NS is better designed for very large corporate networks which include multiple local or regional subnetworks. NS takes care of the addressing mechanism and allows for great flexibility in network design and implementation.

Compliance to Standard

The NS network links implement industry and de facto standard protocols such as DARPA TCP/IP as the network transport and internet levels for all network links, CCITT X.25, HDLC or LAP-B, as well as IEEE 802.3 for the other levels.

Users can take advantage of these protocols and programmatically access the TCP or X.25 levels to develop special software such as applications for connecting an HP 3000 computer to a non-HP device.

More Applications

NS serves as a platform for future applications and networking products available from HP. For example, users wanting to install NetDelivery on their system or the OpenView network management products will require NS.

UPGRADE PROGRAM

Special Promotions

HP wants to encourage its customers to migrate their networks from DS to NS and offers special promotions on the NS products. Any customer with support contracts on the products listed hereunder will receive a FREE upgrade to the corresponding NS product:

DS Network Services (32344A/R)	NS 3000/V Network Services (32185A/R)
DS Point-to-Point, Direct (30285A)	NS Point-to-Point 3000/V (30271A)

DS-NS MIGRATION STRATEGIES

SIMULTANEOUS STARTUP

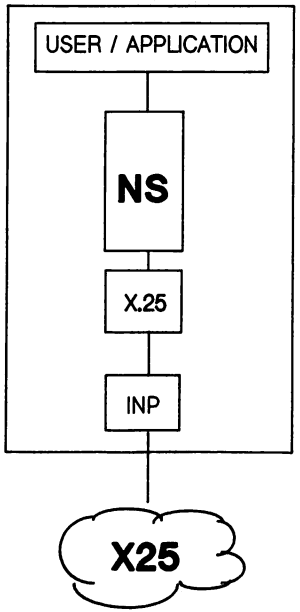

DUAL INP

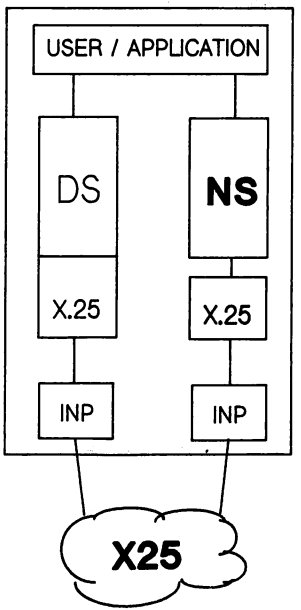

SHARED INP

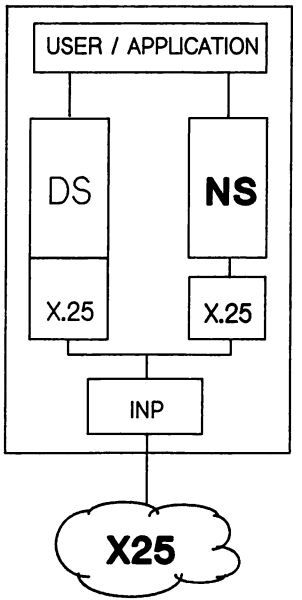

2037

NS3000/V NETWORK SERVICES & LINKS

PRODUCT STRUCTURE

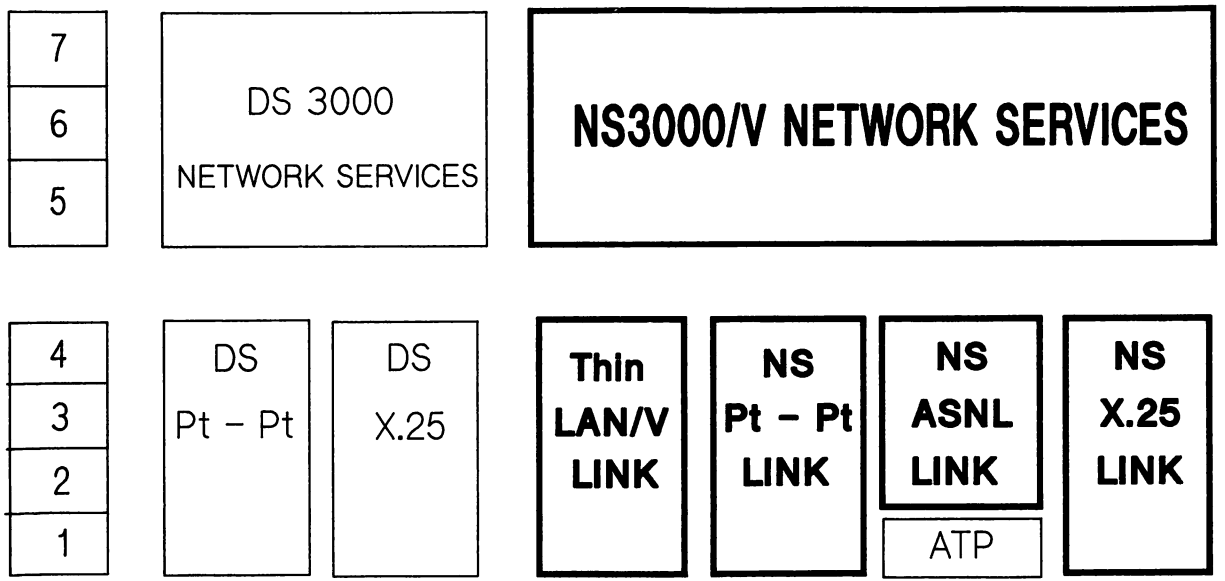

2037

DS Point-to-Point, Modem (30285A)	NS Point-to-Point 3000/V (30271A)
DS X.25	NS X.25 3000/V (32187A) (24405A)

No Orders

NO ORDERS NEED TO BE PLACED FOR THIS FREE UPGRADE.
To ensure that all DS customers get the opportunity to easily upgrade, the NS software for the four products listed above will be distributed via MIT tapes as part of the normal DS update. Customers simply need to purchase a support contract on the NS product they have received, and they will begin receiving software and manual updates.

The first MIT tape on which this upgrade is available will be V-delta-3, in conjunction with the introduction of NS X.25/V. The free upgrade is planned to be available for a year to ensure a broad coverage of HP's DS customers.

MIGRATION STRATEGIES

There are three primary migration strategies that customers can choose to implement when migrating from DS to NS. The choice of a migration strategy is influenced by a variety of factors such as network topology, type and size, organizational considerations and geographical location of the nodes in the network.

DS TO NS UPGRADE PROCESS

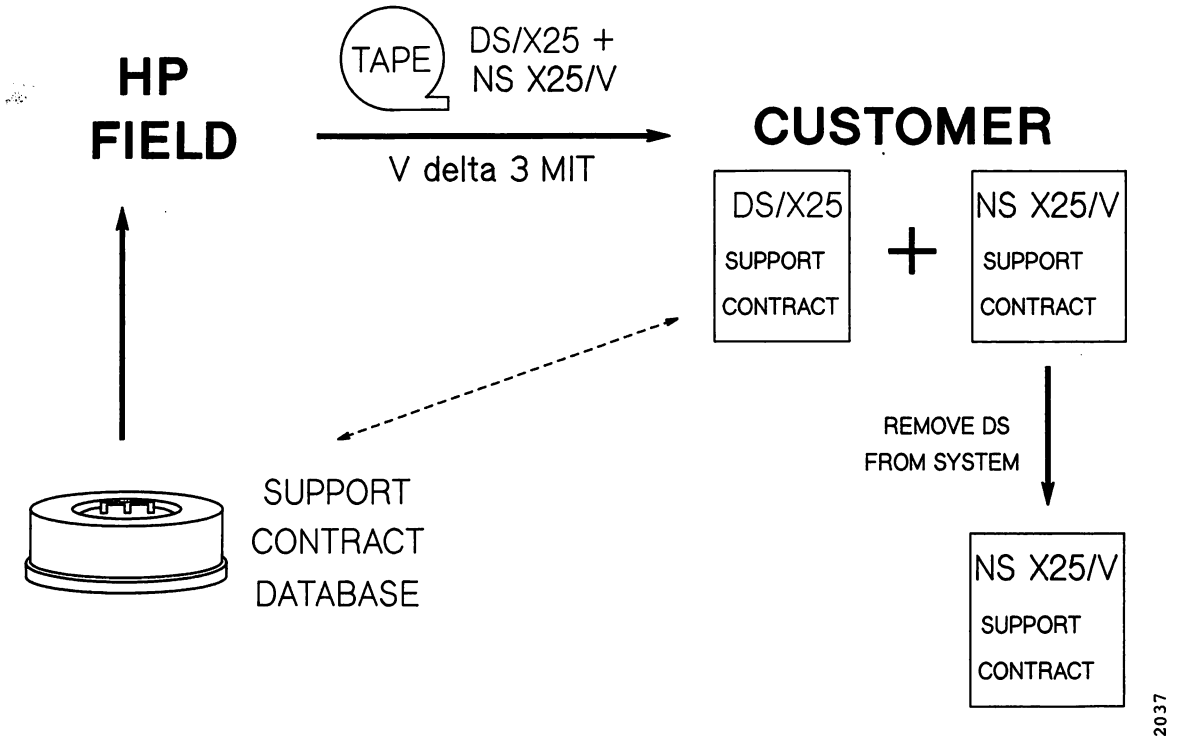

Simultaneous Startup

This is a migration strategy in which the DS network is shut down and the NS network is brought up on all nodes in the network simultaneously. The installation of NS 3000/V links and services can be phased in over a period of time, but it is the actual startup of the NS network that must happen simultaneously. This strategy is appropriate for a small network (less than five nodes) that is geographically centralized and when there is no reason to maintain the DS environment for remote communications to non-NS supported systems such as HP 1000 or S/III, 30,33.

Dual INP Configuration

This strategy requires an additional INP in order to concurrenctly run a DS and NS link. This strategy enables the customer to phase in migration to NS. Consider using this strategy when the network is larger or more complex than the one described above, or when DS connectivity must be maintained. This strategy is appropriate when the network is hierachical in design and most nodes communicate with one central node such as seen in many point-to-point networks.

Shared-INP Configuration

This strategy is supported only for X.25 networks. This requires upgraded DS software and configurations changes to both NS X.25

and DS X.25 in order for them to share an INP. This strategy allows the customer to gradually migrate their network from DS X.25 to NS X.25 and maintain full connectivity of the network throughout the process.

Shared-INP Principles

The shared-INP migration strategy is a phased process which requires some preparation and organization.

The main steps of the process are:

- PREPARATION: Design the network with sub-networks and gateways, examine IP addressing and node naming, verify DS applications will remain unchanged with NS, define access security and back-up routes.

- INSTALLATION & CONFIGURATION: Install all DS and NS software, modify the I/O configuration, enter all NS X.25/V parameters, verify configuration.

- NETWORK DIRECTORY: Create a network-wide network directory and disable all node addresses that still do not have NS installed.

- START-UP: Activate NS in the shared-INP mode and distribute the Network Directory via DS to the remote nodes and activate their NS software modules.

- ADDING NS NODES: As new nodes start-up NS, enable their addresses in the Network Directory.

- MONITORING: When NS is installed on all nodes, ensure all user and application sessions are moving from DS to NS.

- REMOVE DS: When no more network activity is generated with DS, remove it.

The shared-INP strategy will be illustrated during the presentation by a four node network migration example.

MIGRATION TOOLS AND SERVICES

There are a variety of Network Support tools available to help customers plan for migration.

The Network Planning and Design service is used to conduct an in-depth needs analysis to develop a customized and comprehensive network design. This can be used to develop a detailed DS to NS migration plan. Network Prepare can be purchased to provide assistance in developing an implementation schedule for migration.